PROTON caretec

USER MANUAL

manual & technical specification

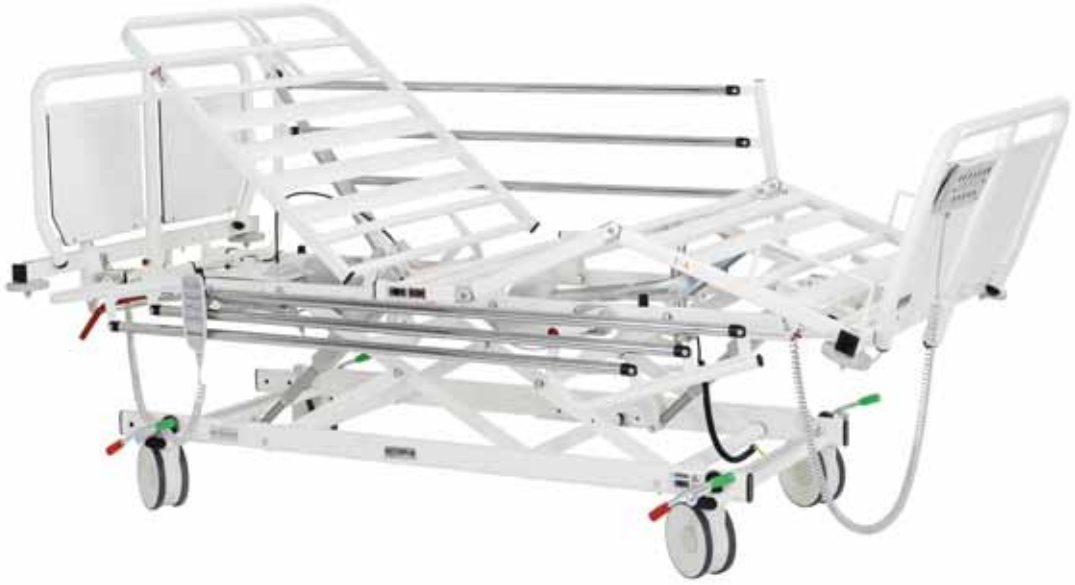

Proton P2

Thank you for choosing a quality product from Proton Caretec

Our products are developed to provide care providers and other personnel with an ergonomic and user-friendly environment while at the same time ensuring the user has a comfortable place to rest.

The development work takes place in close cooperation with users, technicians, as well as those involved in healthcare. We have chosen materials, designs and technical solutions that provide a high level of safety, a good working environment, and make the products easy to use.

The product is tested by a third party, guaranteeing that it meets the standards listed in your area of application.

By following our advice in this user manual, you will have a product that will function excellently for many years.

The most recent information about our products and accessories is always available at: www.proton.se/caretec

PROTON caretec

Proton Caretec AB
Box 8
Mellangatan 1
SE-568 30 Skillingaryd

Switchboard	+46 370 69 26 60
Fax	+46 370 69 26 70
E-mail	caretec@proton.se
Website	www.proton.se/caretec

Certified according to ISO 9001 and 14001.
Proton Caretec reserves the right to make changes to the user manual if amendments and updates take place in the product. Visit our website for the most recent version of the user manual.

Table of contents

Use and safety instructions 4
Product description....5
Explanation of labels 6
Installation 8
Functional check....8
Boards on/off....9
Adjustable board....9
Fixed board....9
Side rails....10
Up 10
Down 10
Fitting and removing removable side rails (optional)....11
Fitting IV stand....11
Fitting lifting pole....12
Functions on the handset....13
Functions on the operator panel 13
Quick folding the back section....14
Extension part....14
Brake 15
Side rail extension (accessory, item no 710715) 16
Storage shelf (accessory, item no 10793)....17
Screw for potential equalisation (location) 17
Hanging up power cable....17
Maintenance....18
Castors/brakes 18
Lifting system/joints lying surface 18
Lock/locking mechanisms....18
Electrical systems....18
Cleaning painted and chrome parts....18
Cleaning mattresses....18
Product information 19
Regulations 19
Service life of the product 19
Technical data 19
Materials 20
Accessories 20
Troubleshooting guide....21
Recycling the bed 23
Environment Product Declaration....24
Service schedule 27

Use

Proton P2 is an electronically operated patient bed intended for use in hospitals or other healthcare institutions where medical monitoring is required. The purpose of the bed's functions is to make it easier to maintain or improve the patient's condition.

Please read the entire manual carefully before use.

The manual must always be available to the user.

Safety requirements

The requirements below must be satisfied in order for the product to be safe for the user.

- The bed may only be used by individuals over 12 years of age.
- The patient must have a BMI of 17 or higher.
- The patient must weigh 40 kg or more.
- The patient must be 146 cm or taller.
- Only accessories approved by Proton Caretec may be used with the bed.
- Modifying the product is not permitted.
- Only originally designed spare parts and accessories may be fitted to the bed.

Safety instructions

- The electrical system has been tested and approved according to applicable standards, however, interference between the bed and other products may occur. Increase the distance between the bed and other products to reduce the electromagnetic interference.
- Proton P2 must be connected to an earthed electrical socket.
- The bed should be placed in its lowest position when the patient is unattended in order to reduce the risk of injury by falling.
- Side rail supports (see Accessories) are recommended for anxious/restless users.
- Dangers may arise if the power cable is handled carelessly or is exposed to mechanical stress such as being squeezed or pulled.
- Cables from other equipment should be placed at the end of the bed. In the event they are needed, precautions must be taken to avoid the cables getting trapped in the bed.
- If a thicker mattress than that prescribed is needed, side rail extensions must be used.
- When operating any of the bed's functions, you must ensure that nothing is trapped in the bed's moving parts.

Product description

1. Brake pedal
2. Side rails
3. Head board
4. Foot board
5. Back section
6. Seat section
7. Thigh section
8. Foot section
9. Handset

Bed with adjustable head board

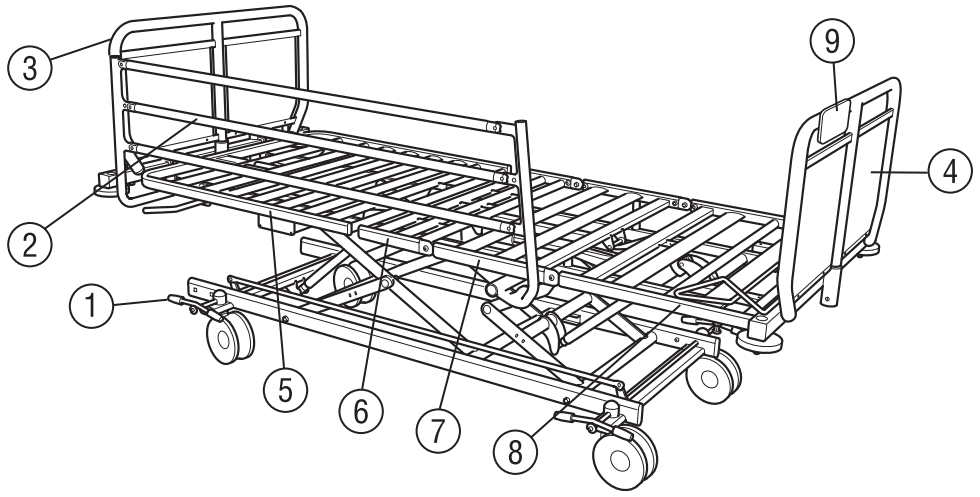

Bed with fixed head board (HCH board)

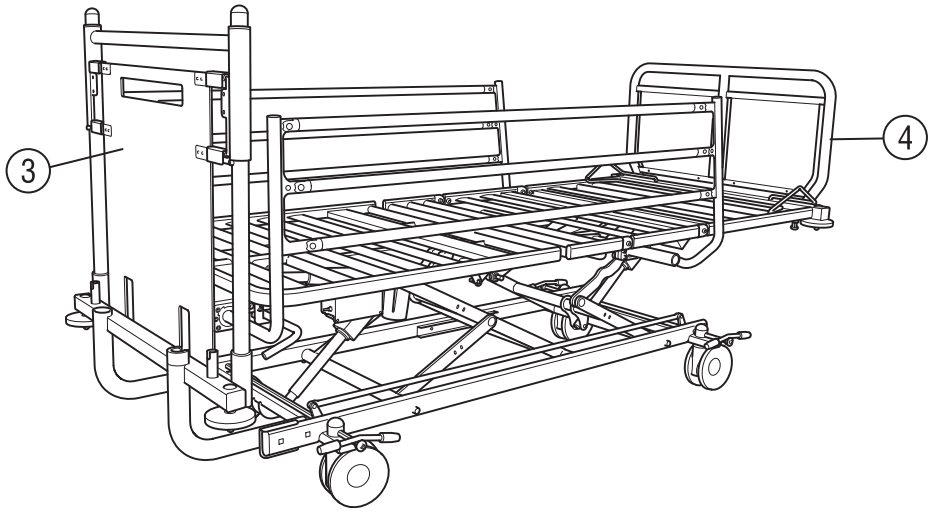

Explanation of labels

Production and ID label
Item no: 85049

1. Manufacturer
2. Manufacture order number
3. Item number
4. Product
5. Noise level
6. Duty cycle
7. Mains voltage/max power consumption
8. IP class
9. Date of manufacture
10. Safe working load
11. Patient weight
12. Warning! Read the manual before use
13. The product is tested according to type: B
14. Bar code contains info: country of manufacture, manufacturer, item number, check digit
15. The product is CE marked

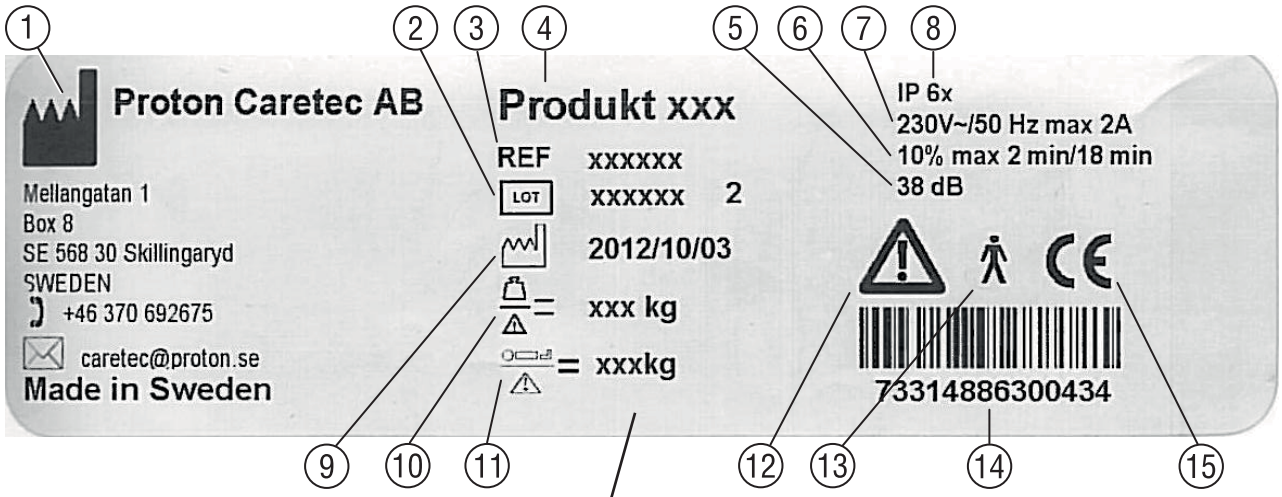

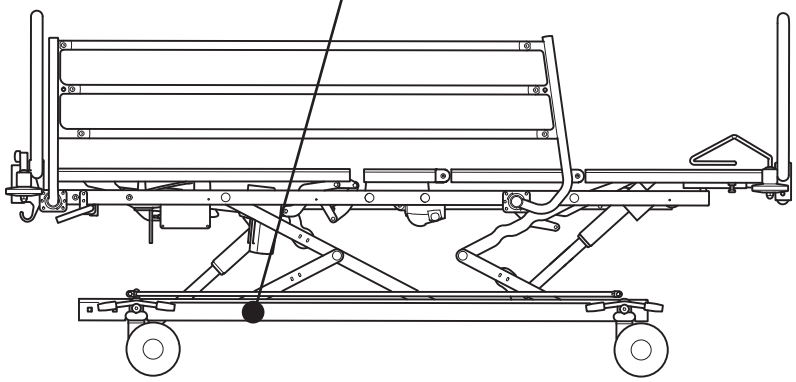

Quick folding of back.

Display lying orientation.

Warning decal: Read the manual.

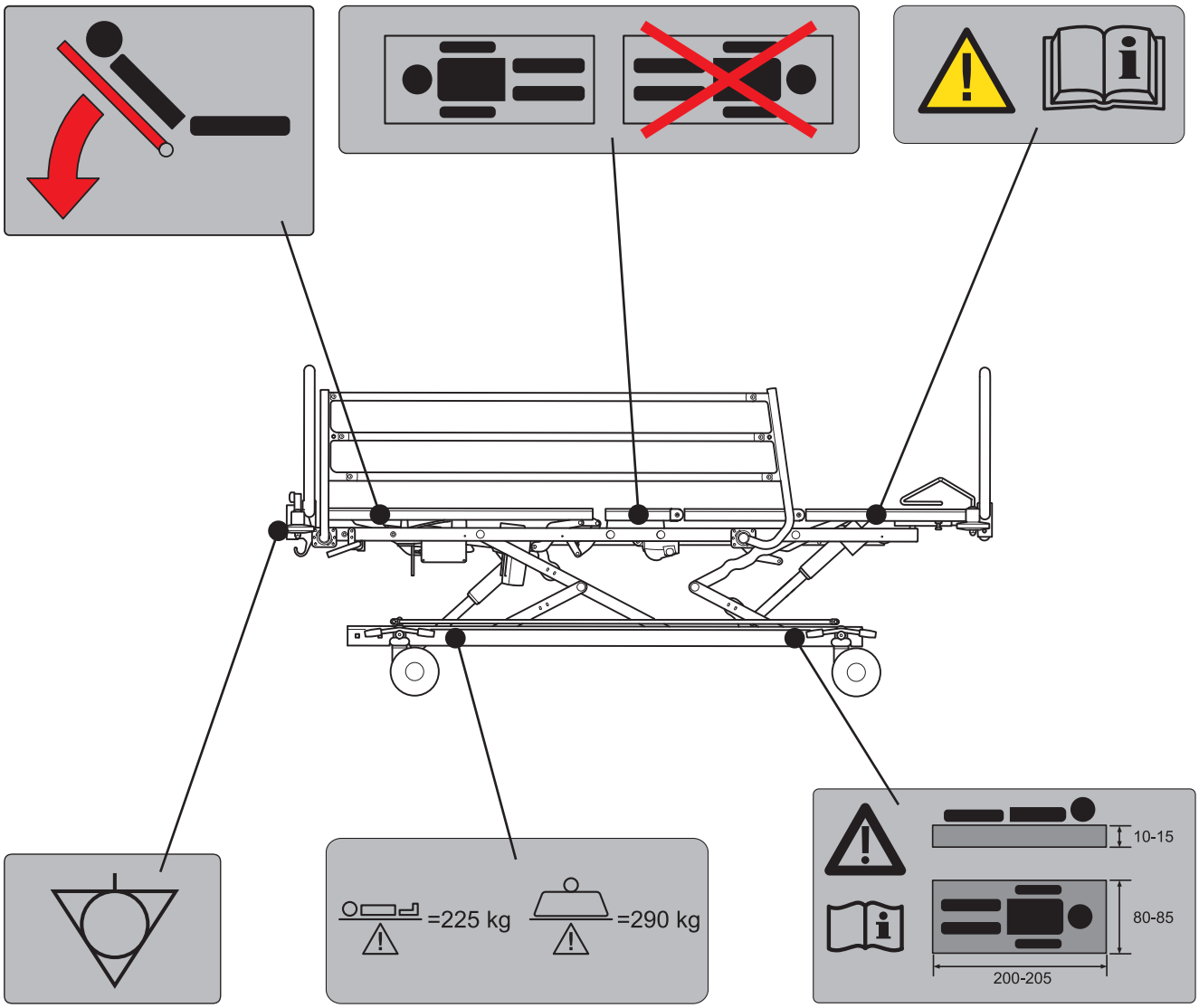

Screw for potential equalisation.

Indication of patient weight and Safe working load.

For indication of mattress size: Read the manual.

Installation

1. *Connect the bed's plug to the electrical socket. The bed must always be connected to the electrical socket to ensure the battery does not lose charge.*

2. *Put the bed in its highest and lowest position to calibrate the lift motors. If the bed has been without power and the battery discharged, the motor system will beep to indicate that the bed must be calibrated.*

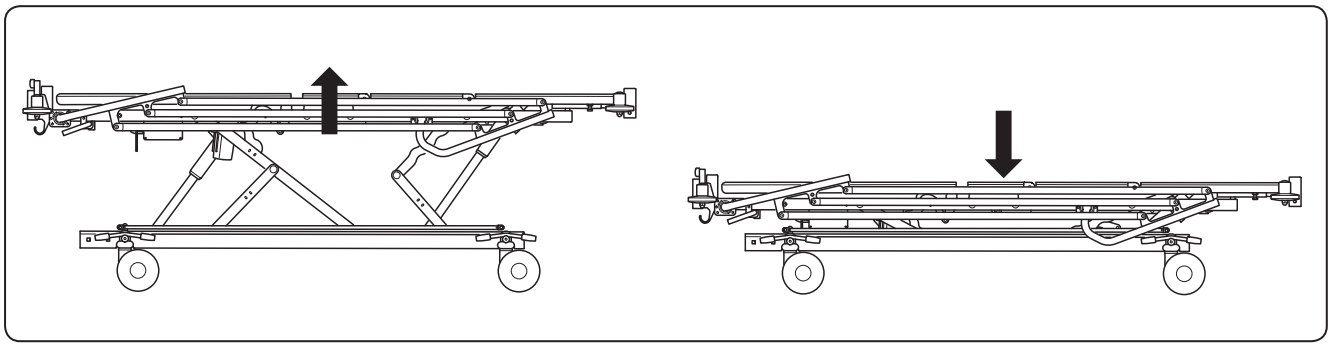

3. *Perform a functional check. See below.*

Functional check

Check the following:

- **Boards:** Must be easy to fit and remove.
- **Side rails:** Must be easy to fold up and down. Also check that the side rail's locking function works.
- **Handset controls:** Check that all functions on the handset work.
- **Quick folding the back section:** Check that quick folding works.
- **Brakes:** Check that all positions work.

The power cable must not be constricted.

Place the bed at least 15 cm from the wall outlet.

Boards on/off

Adjustable board

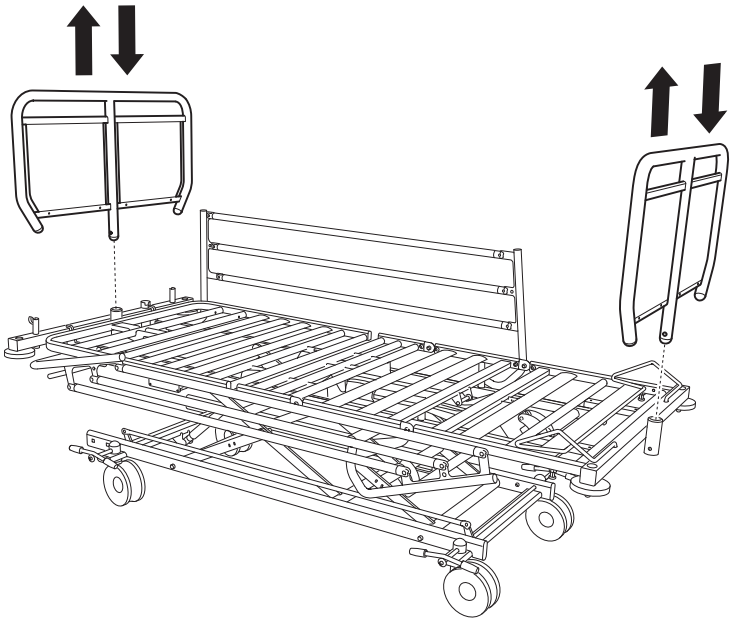

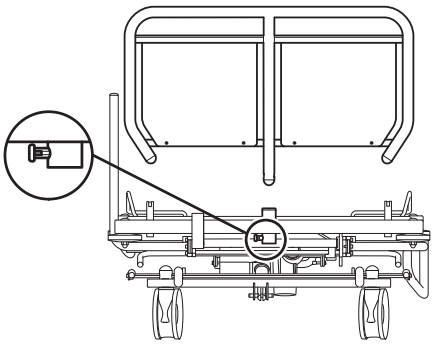

There is a pin for locking boards on the version of the bed for psychiatric care.

Fixed board

Head board consisting of lintel, high runner poles and end panel.
A fixed board means that the board does not move when raising and lowering the bed.
The board panel can easily be lifted off and used during CPR.
On the runner poles there are two securing holes for selecting the height of the lintel.

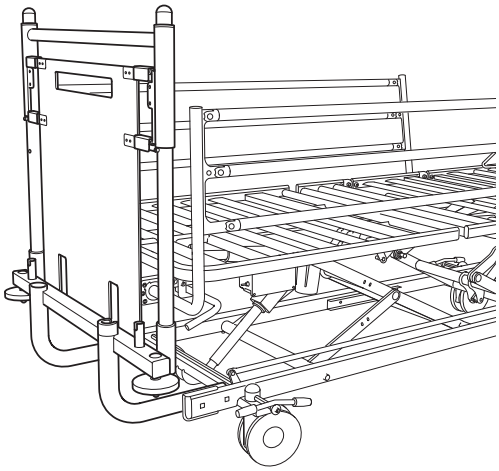

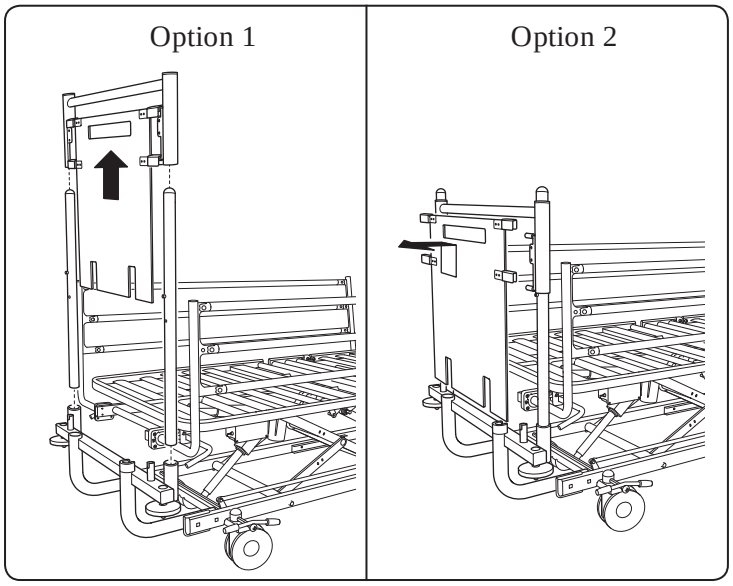

Side rails

Up

① Lift the upper side rail pole until the side rail is in its uppermost position.

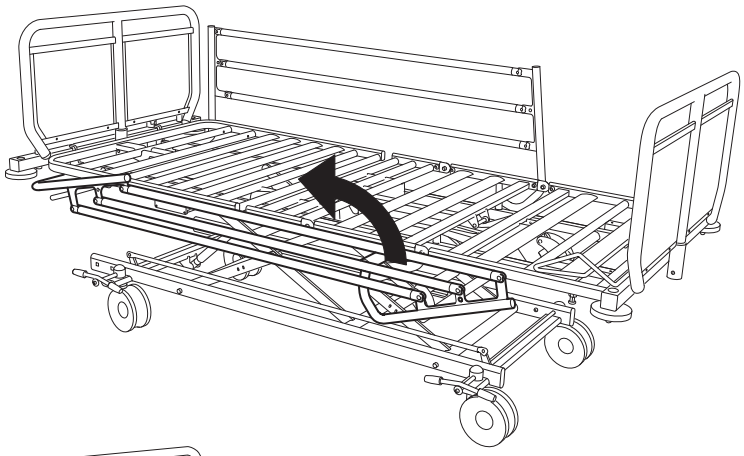

② Move the side rail back and forth to make sure that it is locked.

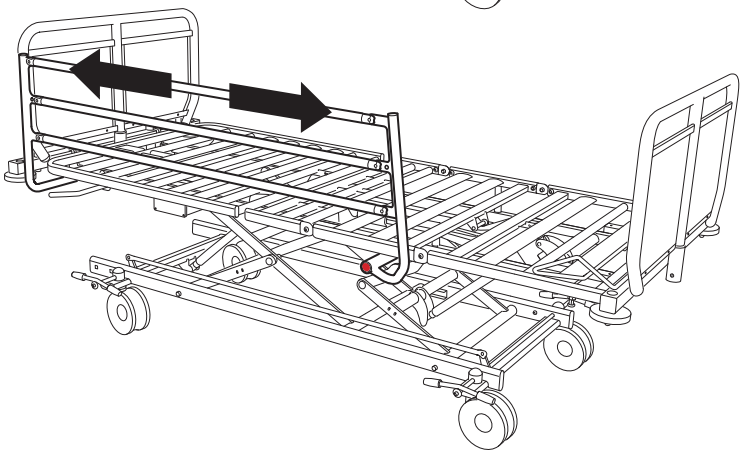

Down

① Pull back the side rail.

② Press the red button.

③ Fold down the side rail.

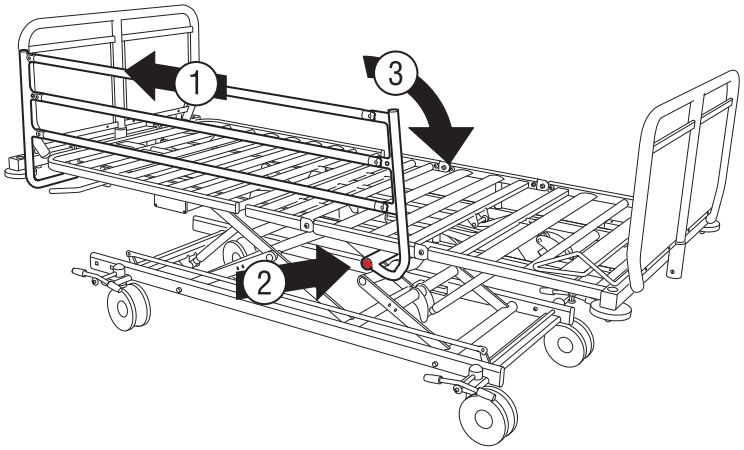

Fitting and removing removable side rails (optional)

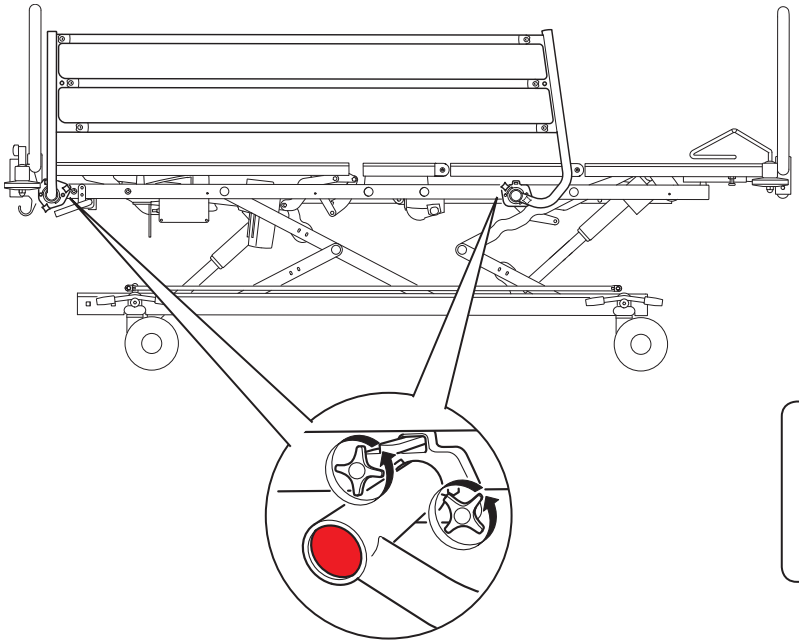

Use the guide pins to facilitate assembly and disassembly.

Fitting IV stand

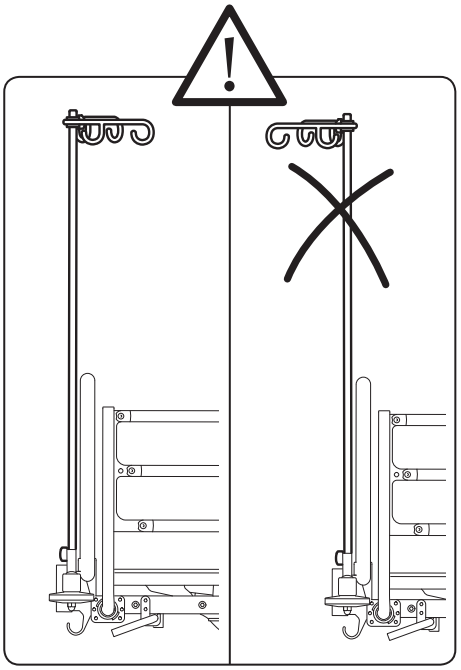

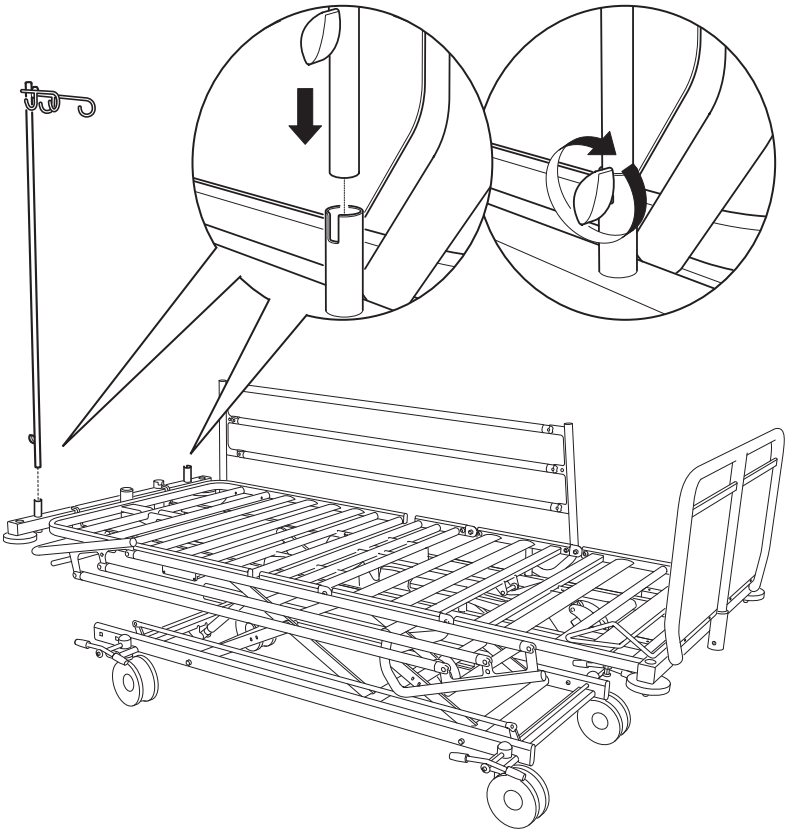

Fitting lifting pole

Adjustable board

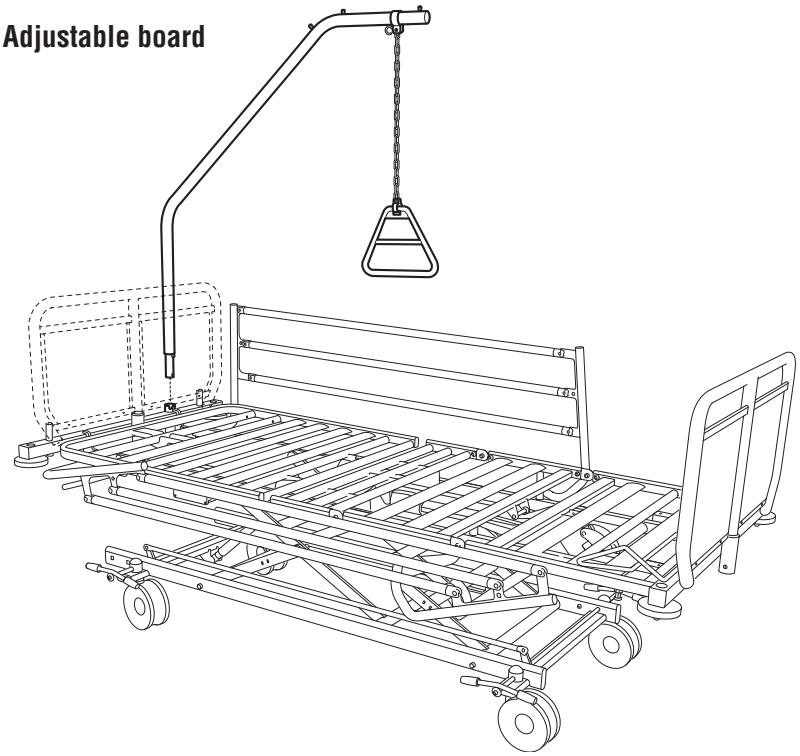

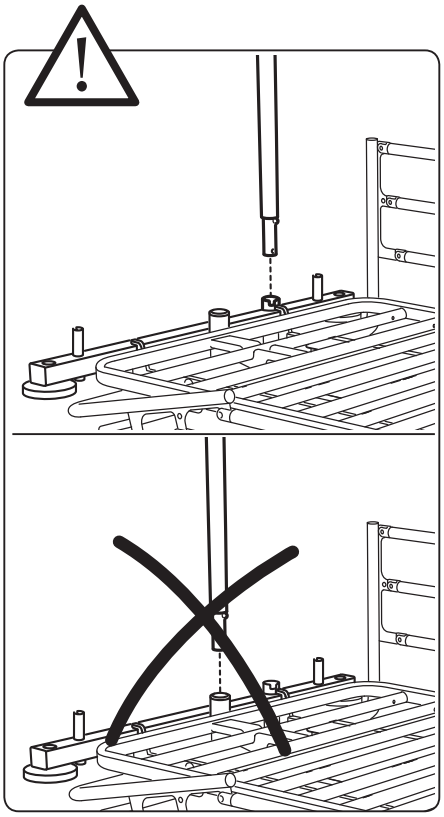

Fixed board

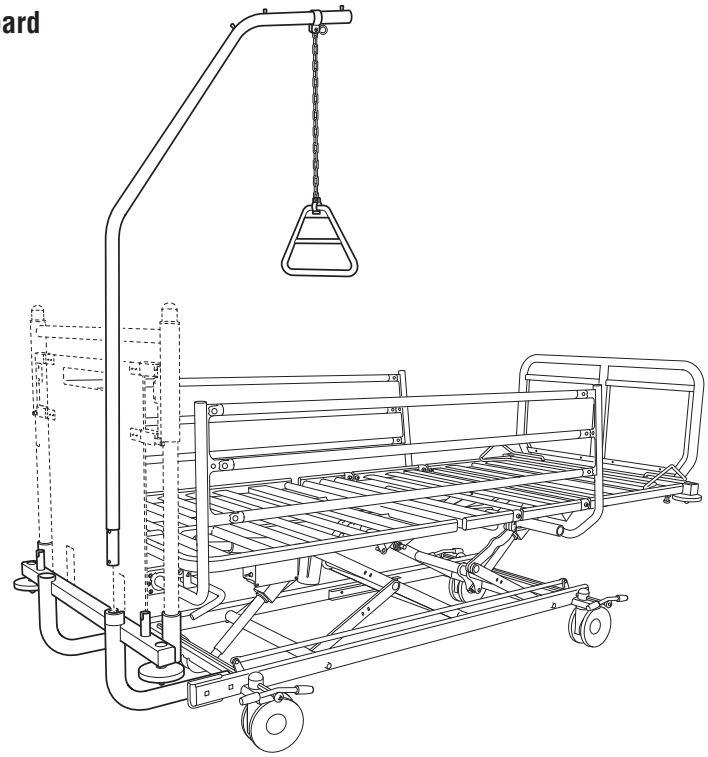

Functions on the handset

Back
Setting the back section: Up/down

Bed height
Setting the bed height: Up/down

Legs
Setting the foot and thigh sections: Up/down

Back, legs, comfort position
Setting the comfort position: Up/down

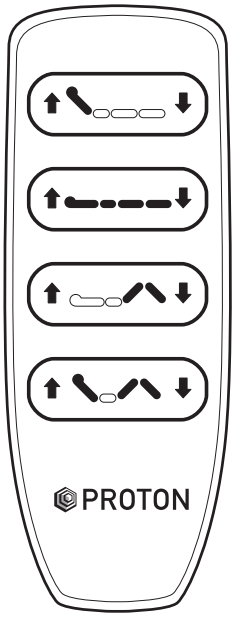

Functions on the operator panel

CPR
The bed's lying surface levels out and the bed reverts to its lowest position.

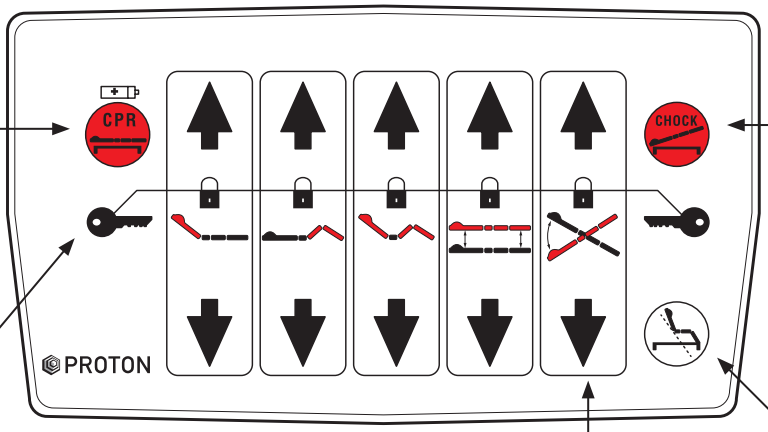

TRENDELENBURG
The bed's lying surface levels out and the bed positions itself at a 15° angle with the patient's head at the lower end.

Locking functions
Press the key symbol while at the same time pressing the padlock symbol of the function you want to lock on the patient's handset. A diode marks when the function is locked. Do the same thing to unlock a function.

Button to adjust the bed's longitudinal tilt
When the lying surface is horizontal, the motors stop to indicate that the bed is horizontal.

Sitting position
The back and leg lying surfaces extend to their maximum positions after which the bed's upper section is set at -13°.

Other functions are managed in the same way as each button on the handset.

Quick folding the back section

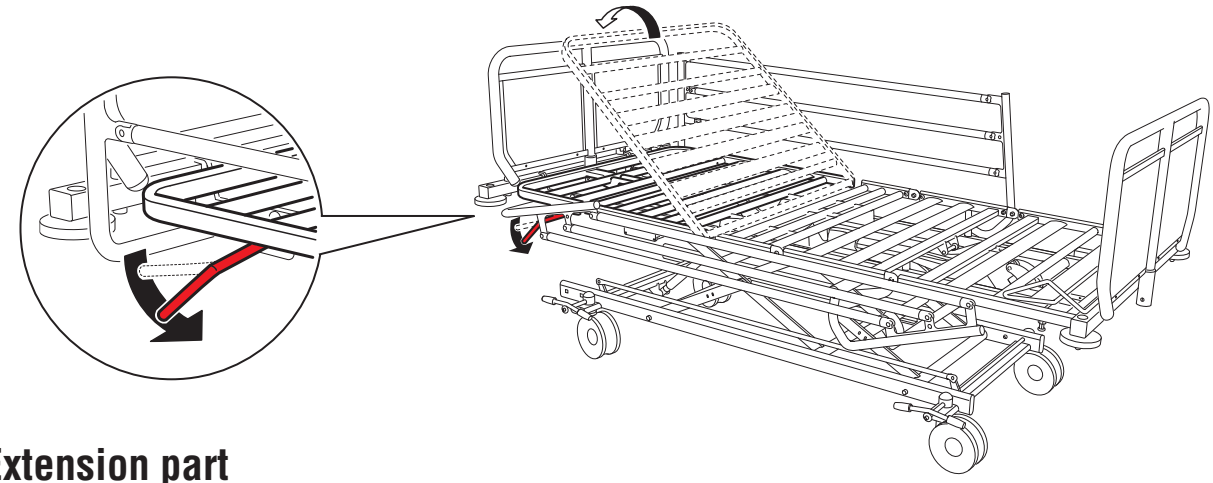

Extension part

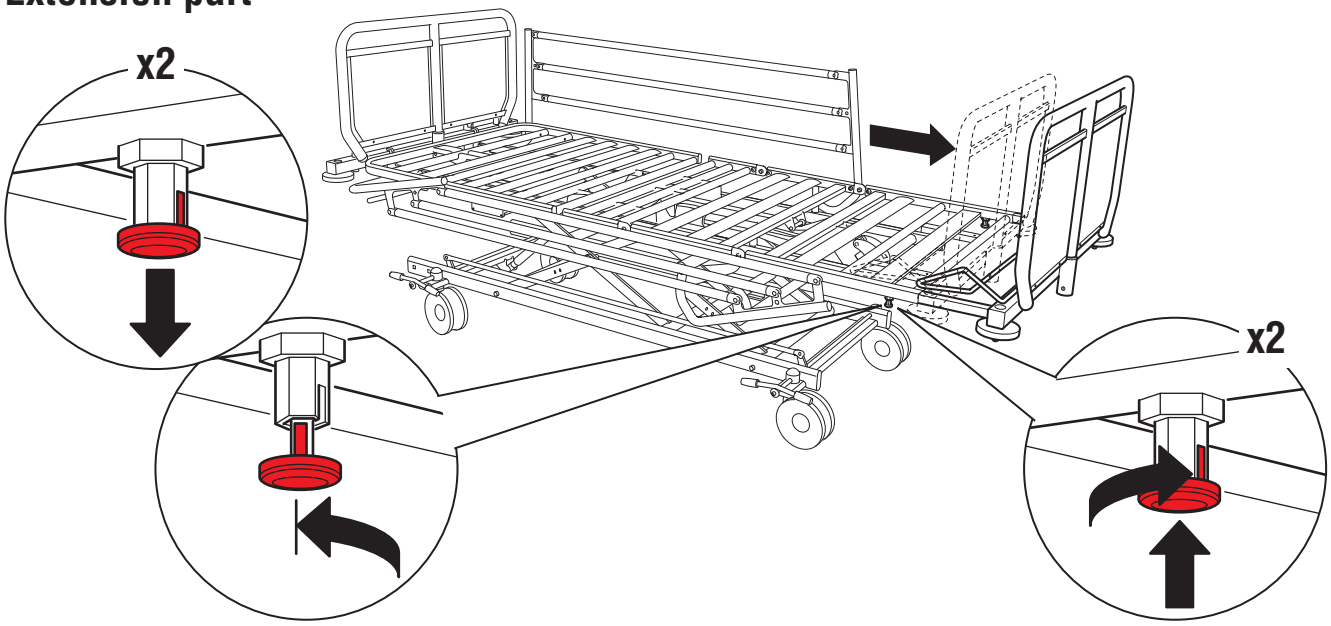

Mattress extender must be used when the bed is extended.

Check that the extension part is fixed.

**When using the side rail extension accessory,
the bed's extension part may not be used.**

Brake

Red pedal: applies the brake on the castor.

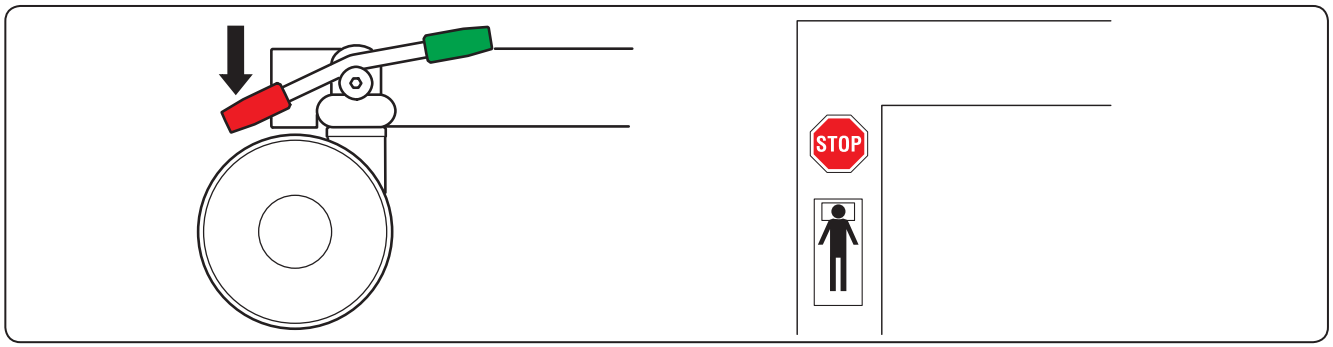

Green pedal: unbraked and direction locked castor activated.

(Used for better stability for longer transport.)

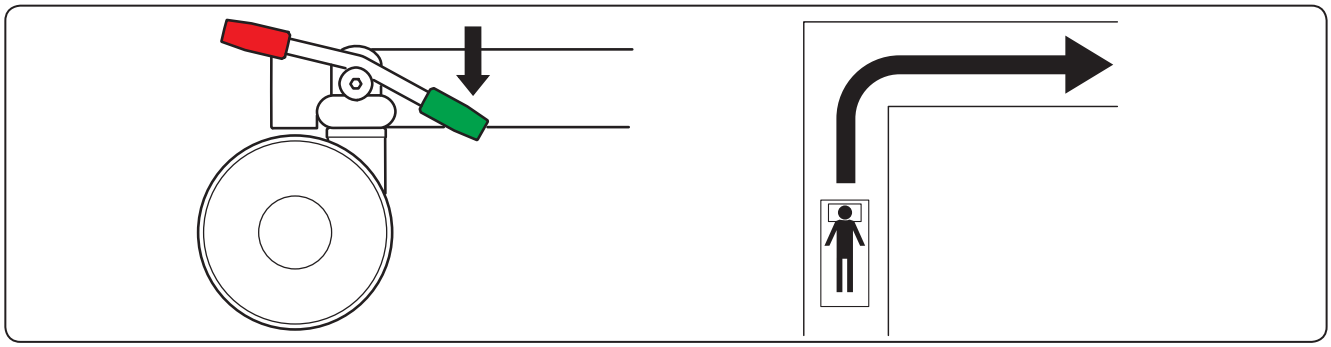

Middle position: unbraked and freely rotating castor.

(Used when the bed is moved through confined spaces.)

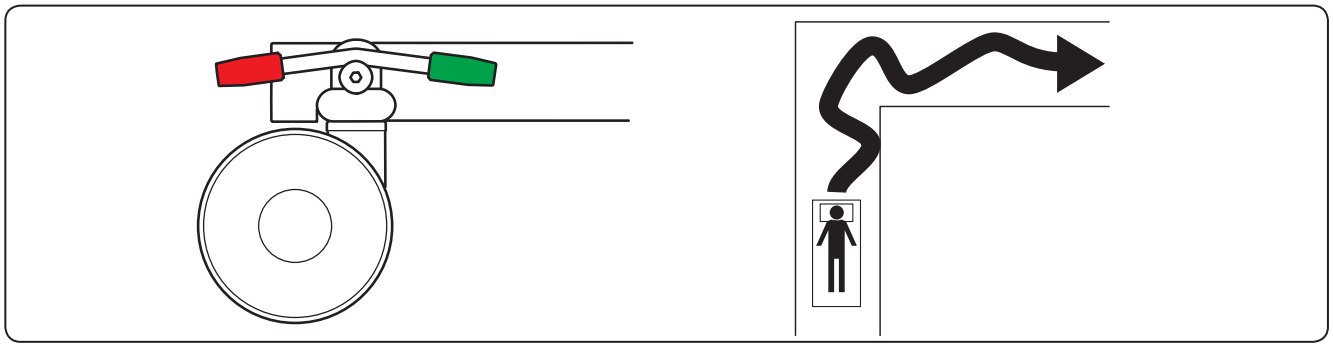

The castors must only be unlocked when moving the bed.

Side rail extension (accessory, item no 710715)

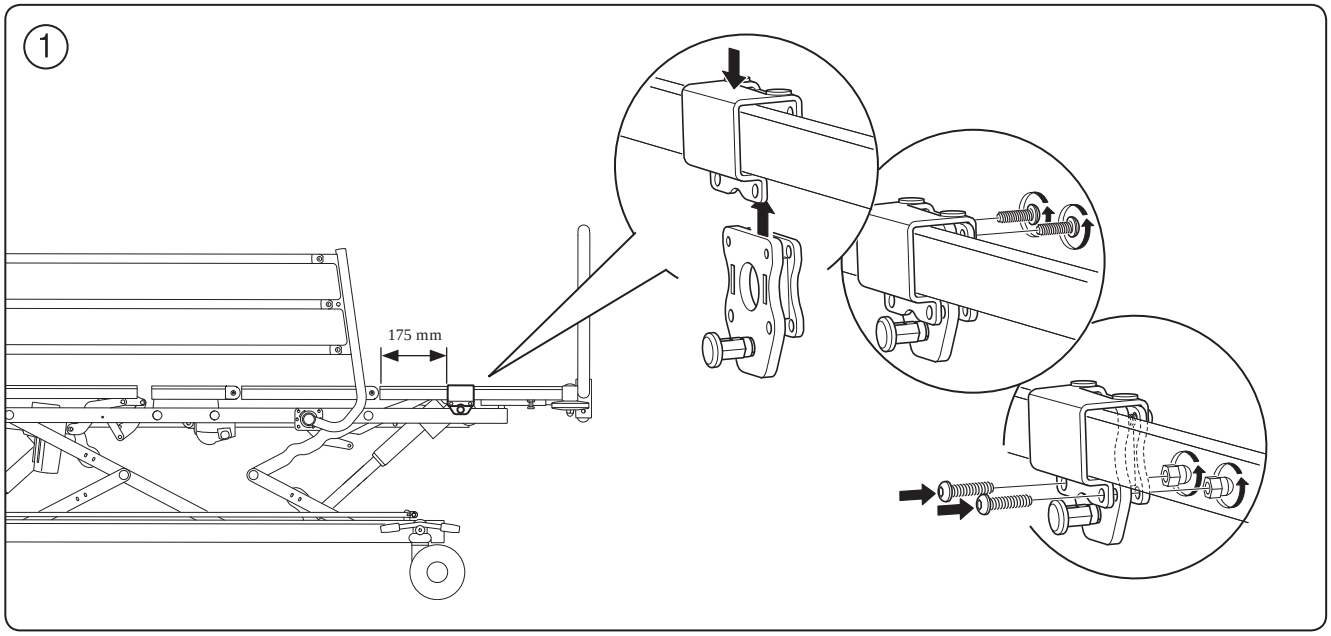

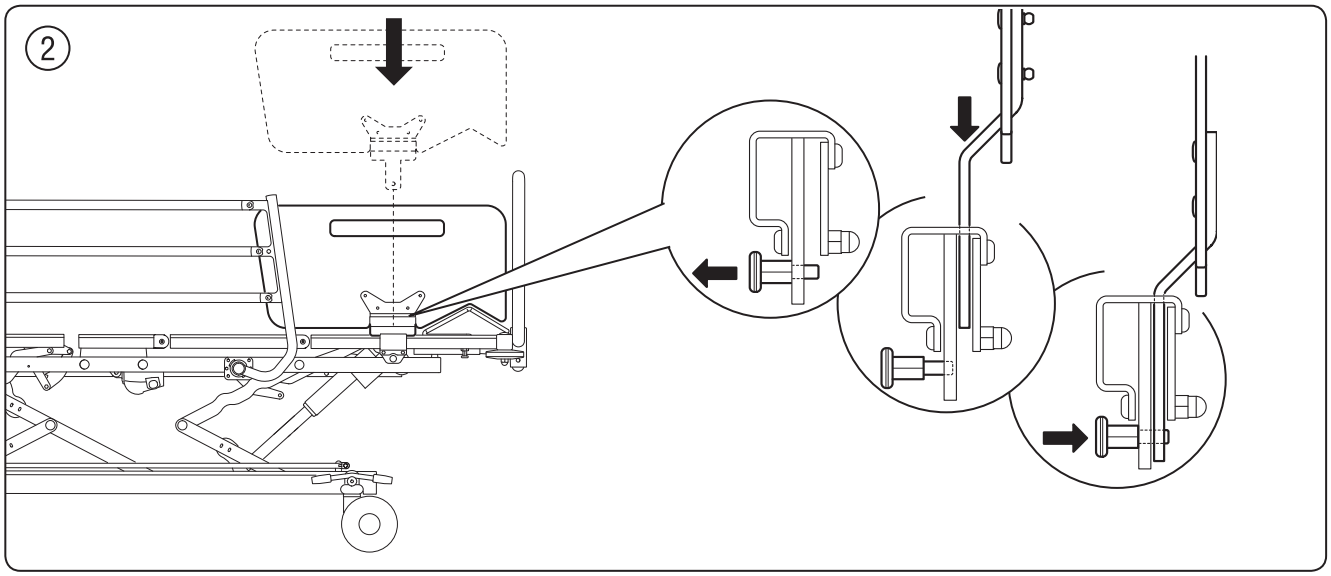

Ensure that the locking pin is locked after fitting.

When using the side rail extension accessory,
the bed's extension part may not be used.

Storage shelf (accessory, item no 10793)

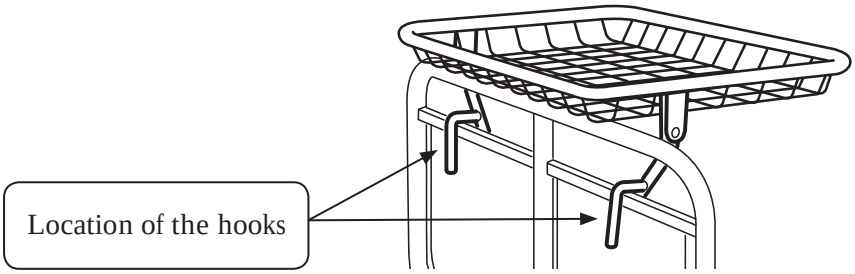

Screw for potential equalisation (location)

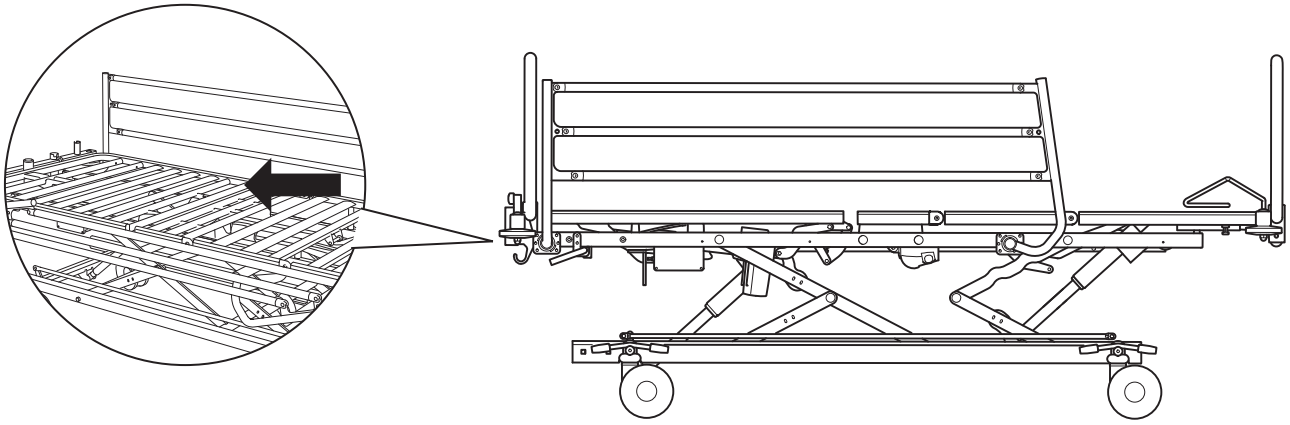

Hanging up power cable

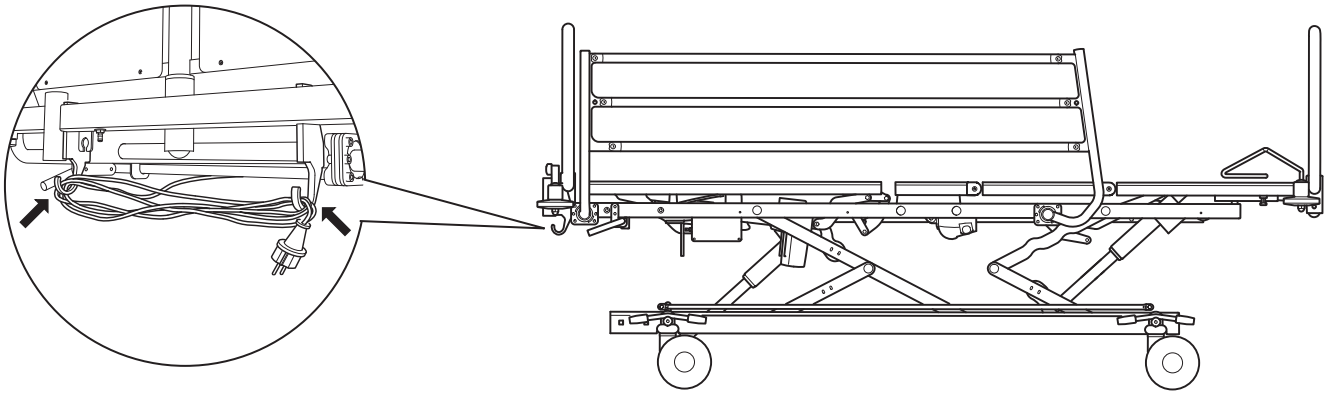

When moving the bed, the power cable must be hung on its hooks.
This is to prevent the cable from being damaged.

Maintenance

There may be a risk of crush injuries when carrying out maintenance on the bed. Secure the bed in order to minimise the risk of crush injuries when motors or other parts are being disassembled. We recommend that you turn the bed on its side before disassembling.

Castors/brakes

Castor mounts and the castor's directional lock function, brake pedal mounts, tread and brake function must be checked and replaced as required.

Lifting system/joints lying surface

All joints and lying surfaces with a high load are equipped with self-lubricating bushings. However, all joints must be re-greased or lubricated with oil approximately once a year or more often in the event of heavy wear. Check that all bushings and washers are intact. During this review, bolts/joints must also be checked and retightened if necessary.

Lock/locking mechanisms

These must be lubricated and the function checked. For example: boards and side rails.

Electrical systems

These require no maintenance and should not be opened. Faulty parts must be replaced with new units. The guarantee does not apply if units are tampered with or opened.

Frequent and prolonged discharging reduces the service life of the battery significantly. For optimal service life the battery should be charged continuously, which takes place when the bed is connected to an electrical socket. If the bed is not in use, the battery must be charged at least every three months, otherwise it will be damaged as a result of self-discharging.

Cleaning painted and chrome parts

Detergent of the type to dissolve protein components must be used, follow the directions on the package for the correct strength. The pH of a suitable detergent must be between 6.5–7.5. Never use acids, bases or solvents which could damage the product, such as acetone or thinners. Protect the environment by making sure you do not clean the product using chemicals that are harmful to the environment.

In its standard version (IP66), the product can be rinsed off. When cleaning in a tunnel washer or manual high pressure washer, the product must be a "Washable" version, which has special electronics which can cope with high heat and pressure. Never aim the nozzle directly at motors, gas pistons or other functions. The water temperature may be a maximum of 65°C for three minutes. A rinsing agent must be used. During cleaning, the bed must be set in its lowermost position, cables must not be extended during cleaning and the handset should preferably be placed on the bed's lying surface. After cleaning, the bed must be placed in the Trendelenburg position to minimise water in the bed. Functional check (see heading "Functional check") must be performed after each clean. Check that the labels are intact as well.

Cleaning that is not in accordance with the instructions may result in damage to the product, e.g. rust, the drying out of plastic components, cables, etc. This will invalidate the guarantee.

Product information

Regulations

The patient bed is CE marked according to the Medical Devices Directive 93/42/EEC.
The mattress used must be 10–15 cm thick.
The mattress used must be 80–85 cm wide.

Service life of the product

The product has an estimated service life of 10 years. However, the service life is in direct relation to the environment in which the product is used, how much it is used and cleaned, and whether the maintenance guidelines have been followed.

Technical data (for standard design)	
SWL (Safe Working Load)	290 kg
Of which: *According to applicable IEC 60601-2-52*	• 225 kg patient weight • 20 kg mattress • 45 kg accessories (incl. weight of accessories)
IP class	IPX6
Voltage	230 V ~/50 Hz
Maximum power consumption	Max 2 A
Insulation class	Class I type B, double insulated and earthed
Duty cycle (motor capacity)	10%, 2 min/18 min
Lowest/highest height with double castor	34–79 cm
Lowest/highest height with single castor	37–82 cm
Mains connection	The power cable has a length of 2.5 m from the bed's head end
Max noise level	38 dB

Part	Weight	Dimensions
Dimensions with side rails and boards	118 kg	218.5 x 96 cm
Mattress	-	10–15 x 80–85 x 200–205 cm
Boards	-	53 x 86 cm

User environment/storage	
Air pressure	700–1060 mbar
Air humidity	30–75%
Temperature	+10 to +40°C

Materials

Bed frame made from steel.
The board panels are made from laminate.
Plastic components consist of polypropylene, polyamide, polyoxymethylene and polythene.
Metal parts are either powder coated, galvanised or chrome.

Max/min angles of lying surfaces

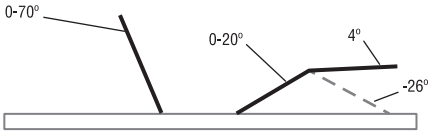

Accessories

Accessories	Item number
Lifting pole chrome	710415
Lifting pole, fixed board, chrome	710417
IV stand	710605
IV stand, fixed board	710606
Side rail extension package	710715
Suspension on board	710512
Side rail extension (each)	710436
Side rail protector	710023
Side rail raising support	710028
Storage shelf	10793

Troubleshooting guide

Fault	Possible cause	Action
Nothing happens when you press the buttons on the handset.	• The power cable is not connected and the battery has no charge • The handset cable is damaged • The handset is damaged • The transformer is damaged • The wall socket does not work • The bed may be overloaded	• Connect the power cable. Put the bed in its highest position to calibrate the lift motors • Replace handset • Replace handset • Replace transformer • Check the fuse • Remove the excess load, wait for a while, then try again
The bed is making a signalling noise	• The bed is not connected to an electrical socket and the battery needs to be charged • The bed is overloaded • The lift motors need to be calibrated	• Connect the bed to the electrical socket • Remove the excess load • Put the bed in its highest position to calibrate the lift motors
The bed's lift function does not work	• The handset is damaged • The lift motor is damaged • The transformer is damaged • The motor/handset cable is damaged	• Replace handset • Try the motor in another electrical socket on the transformer, if it doesn't work, replace the motor • Check that the light on the transformer's lock light ups, if not, replace the transformer • Replace component in question
The bed's back function does not work	• The handset is damaged • The lift motor is damaged • The transformer is damaged • The motor/handset cable is damaged	• Replace handset • Try the motor in another electrical socket on the transformer, if it doesn't work, replace the motor • Replace transformer • Replace component in question

Troubleshooting guide, continued

The bed's leg section function does not work	• The handset is damaged • The lift motor is damaged • The transformer is damaged • The motor/handset cable is damaged	• Replace handset • Try the motor in another electrical socket on the transformer, if it doesn't work, replace the motor • Replace transformer • Replace component in question
Creaking when changing position to any function	• Lubrication dry • Abnormal motor noise	• Find the joint or bearing and lubricate with grease or lubricating oil • Replace motor
The bed will not stay still even though the brakes have been applied	• The brake system is worn or damaged	• Check castor and brake link, replace damaged parts
The bed cannot cope with lifting when changing position for any function	• Overloading • The transformer is damaged • The lift motor is damaged	• Check the patient weight • Replace transformer • Replace lift motor
The extension part does not lock	• The locking mechanism has not been locked properly	• Check the mechanism

For other questions about the beds, please contact us.
A wiring diagram and exploded drawing for each product are available on our website.

Recycling the bed

From an environmental aspect and an economic perspective, the best solution is to recycle the bed. Proton Caretec has a partnership with Human Bridge who will gladly help you make use of old beds and sometimes also bed parts by forwarding them to other countries where they are needed.

If recycling is the only option, this is fine as the bed is designed to be recycled.
Disassemble the bed so that it can be recycled at your local recycling centre.

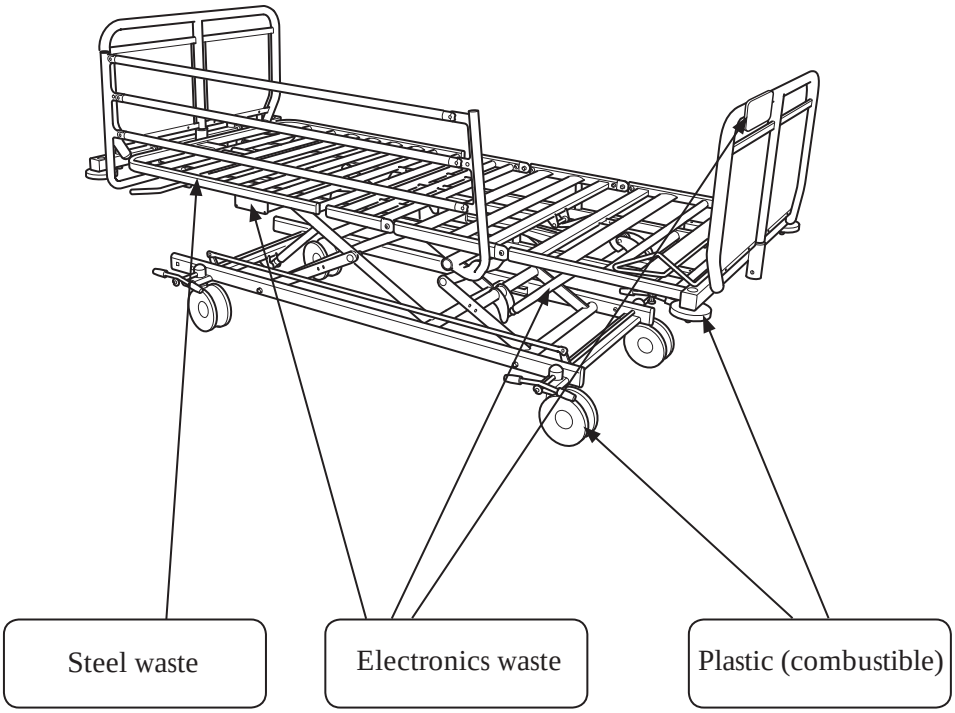

There may be a risk of crush injuries when disassembling the bed. Place the bed lengthways in order to minimise the risk of crush injuries when disassembling the motors.

Environmental Product Declaration

Proton Caretec AB is certified according to ISO 14001.

Activities

Proton Caretec AB offers innovative and qualitative healthcare products with a stylistically pure and functional design. We primarily develop beds and products and accessories for these. The products are assembled in an ergonomically optimised assembly flow. We place the same high requirements on our major subcontractors as we do on our activities, meaning that they must also be certified according to ISO 14001.

Environmental policy

Along with our employees, customers and suppliers, we must:

- Work to continually improve our environmental performance and pollution prevention efforts in accordance with our environmental objectives.
- Take the environmental impact into account when making investments.
- Comply with and meet the environmental laws that are in place.

Our products and services must be produced and distributed in the most environmentally friendly way with regard to what is technically and financially feasible.
We must be aware of and consider the environmental requirements of the outside world. We must place requirements that suppliers with a significant environmental impact cooperate in our environmental work. Our customers must be informed of how to use our products to ensure a long service life and reduced environmental impact. Furthermore, we must strive for a safe working environment for our company and for our customers.

The products

The products are manufactured in solid and durable material, primarily steel with a surface treatment of chrome and/or paint. Panels are manufactured in laminated wood. The products are CE marked and are tested by a third party in accordance with the applicable standards and directives.

Electronics

The ozone-damaging solvents CFCs and HCFCs are not used during the manufacturing process.
The product does not contain asbestos, mercury, PCB or PCT. Plastic components are free from lead and cadmium. The plastic in circuit boards contains flame retardants. No plastic components over 25 g contain the brominated flame retardants PBBs or PBDEs.
The product does not contain any batteries that are classed as environmentally hazardous. The power supply unit contains a transformer, battery, relay card and cable.

Distribution

Packaging consists of a wooden pallet, paperboard and a small amount of plastic. For larger deliveries, where we help to pack up, all material is sent for recycling. Transport primarily takes place using lorries. The transport company works actively for the environment with environmental management.

Environmental Product Declaration, continued

Use
Service and maintenance must be performed by authorised personnel to ensure safety and a long service life.

Cleaning
Cleaning takes place in accordance with the description in the manual.
Use detergents that dissolve protein components, follow the instructions on the packagie for the correct strength. The pH value should be between 6.5–7.5.

Recycling
The patient bed is designed to be recycled easily.
The bed is mainly composed of steel.
All packaging can be recycled. Proton Caretec AB is listed on the FTI register. Ensure that the bed is recycled correctly. Please feel free to contact Human Bridge (www.humanbridge.se) for recycling options for the product in other countries.

Environmental impact
A product affects the environment throughout its entire life cycle. Important environmental aspects for Proton Caretec's products are the production of the materials, mainly steel and plastic, which the product is composed of. The products are optimised for design strength and are designed with as few materials as possible.

Things to remember as a user
Maintain the product regularly according to our advice, this increases the service life and thereby saves the environment. Use environmental classified agents when cleaning.

Ensure that the bed is recycled correctly.
Contact Human Bridge to find out the options for recycling.

Notes:

Service schedule

Copy this page and use one for each bed. The bed's serial number: .....

This must checked:	Signature:							
Date:								
Tighten screws and nuts. Replace disassembled nuts.								
Check that springs are intact.								
Check welding seams.								
Check pins and their locks.								
Check motor for lift function.								
Check motor for back function.								
Check that the back's quick folding function works.								
Check the function of the shock position.								
Check brakes.								
Check motor for leg section function.								
Check that cables and plugs are not damaged.								
Check that the boards can easily be assembled/ disassembled on the bed.								
Check the bed's side rails.								
Replace chrome parts if they are damaged.								
Touch up damage to the paint.								
Lubricate according to the instructions. See Maintenance								
Check that cables are intact and run easily.								
Damaged or worn parts must be replaced.								
If there is battery backup: Check whether the bed works on battery power. The battery must be replaced every three years.								

The bed must be checked at least once a year and each time after it has been cleaned.

PROTON caretec

Proton Caretec AB
PO Box 8
Mellangatan 1
SE-568 30 Skillingaryd

Switchboard +46 370 69 26 60
Fax +46 370 69 26 70
E-mail caretec@proton.se
Website www.proton.se/caretec